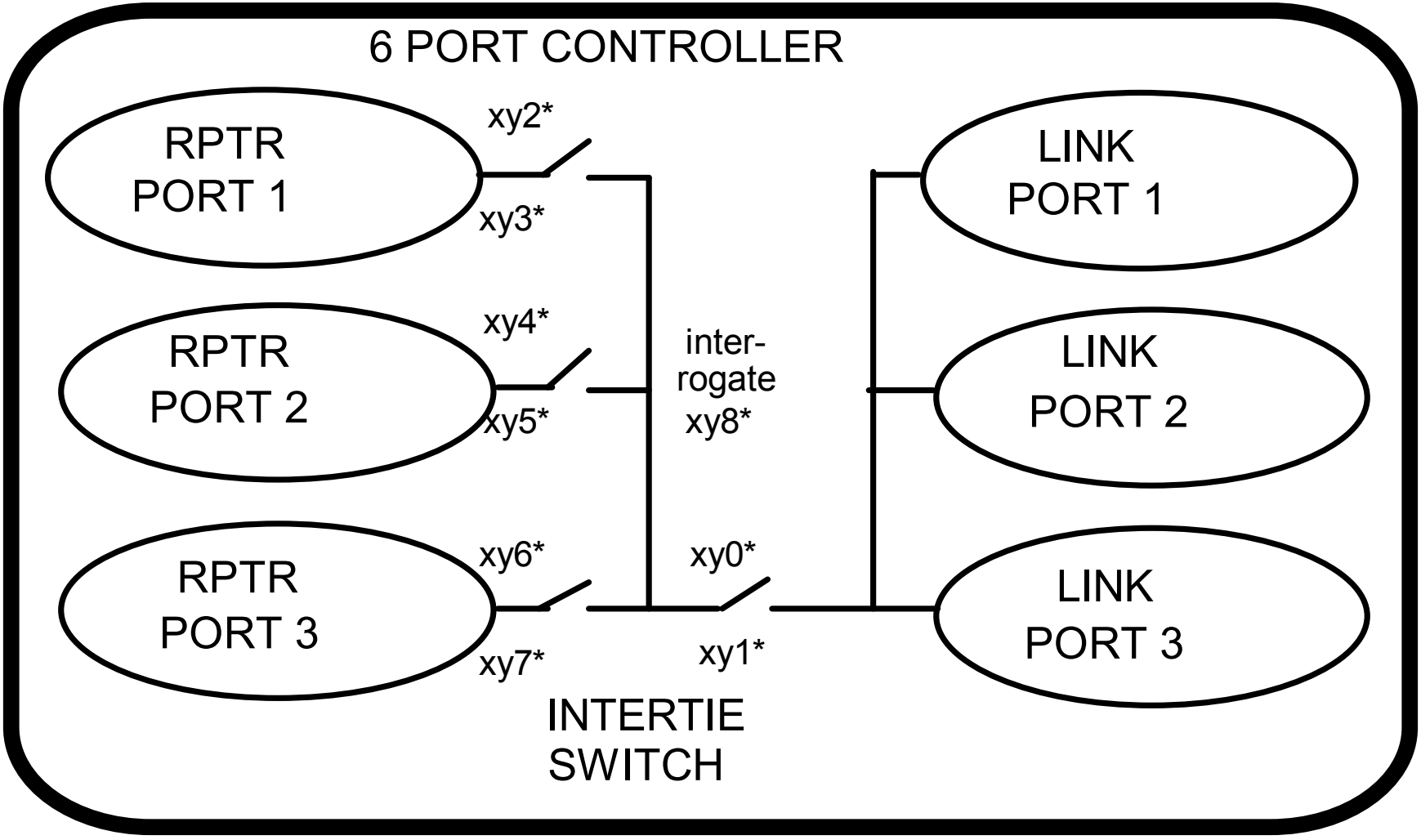
6 PORT CONTROLLER
RPTR PORT 1
RPTR PORT 2
RPTR PORT 3
xy2*
xy3*
xy4*
xy5*
xy6*
xy7*
inter-rogate xy8*
xy0*
xy1*
LINK PORT 1
LINK PORT 2
LINK PORT 3
INTERTIE SWITCH