BLOCK AND SCHEMATIC DIAGRAMS

Block Diagrams show radio components in functional blocks. The blocks are connected to show how they relate to each other. Here are two examples:

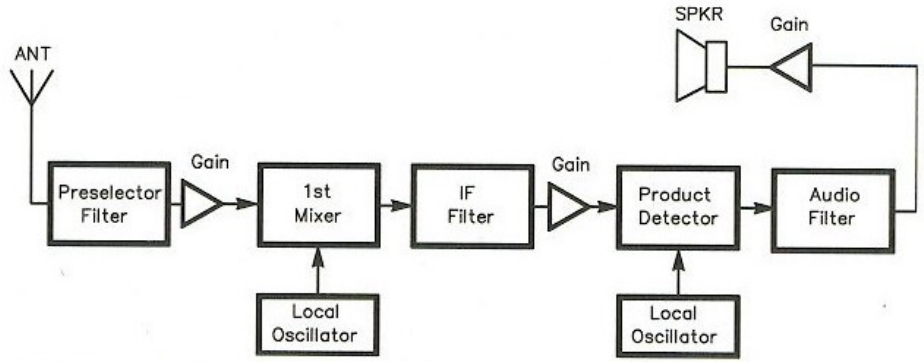

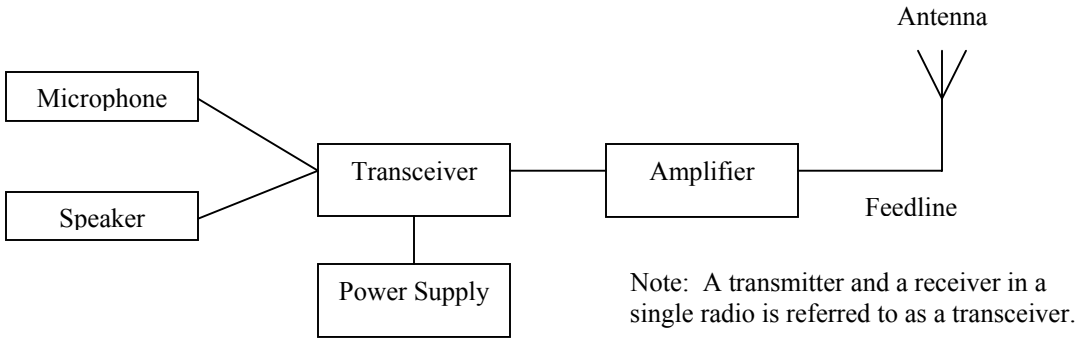

Block Diagram for a Typical Amateur Radio Station
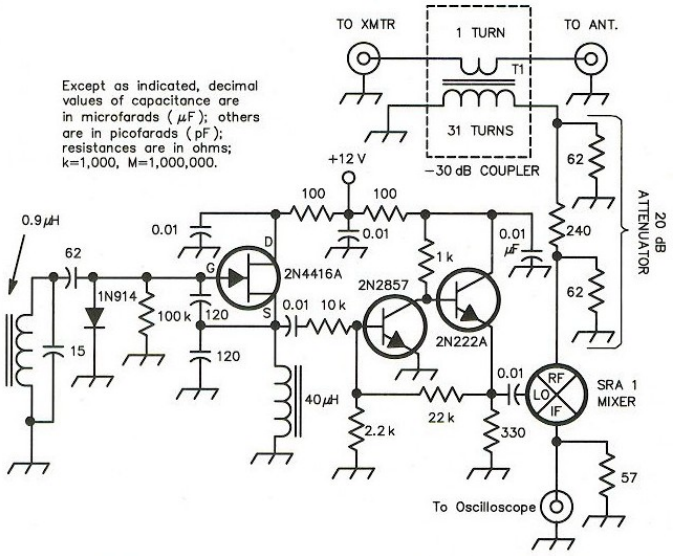
Schematic Diagrams show the individual electronic parts in the equipment and how the parts are connected together. Here is an example: